SumoBot update on the 3d design:
Made the design modular and easier to upgrade/modify with the customized fenders that uses m2.5 and M3 screw hole sizes (2.3mm, 2.7mm, 3.2mm)

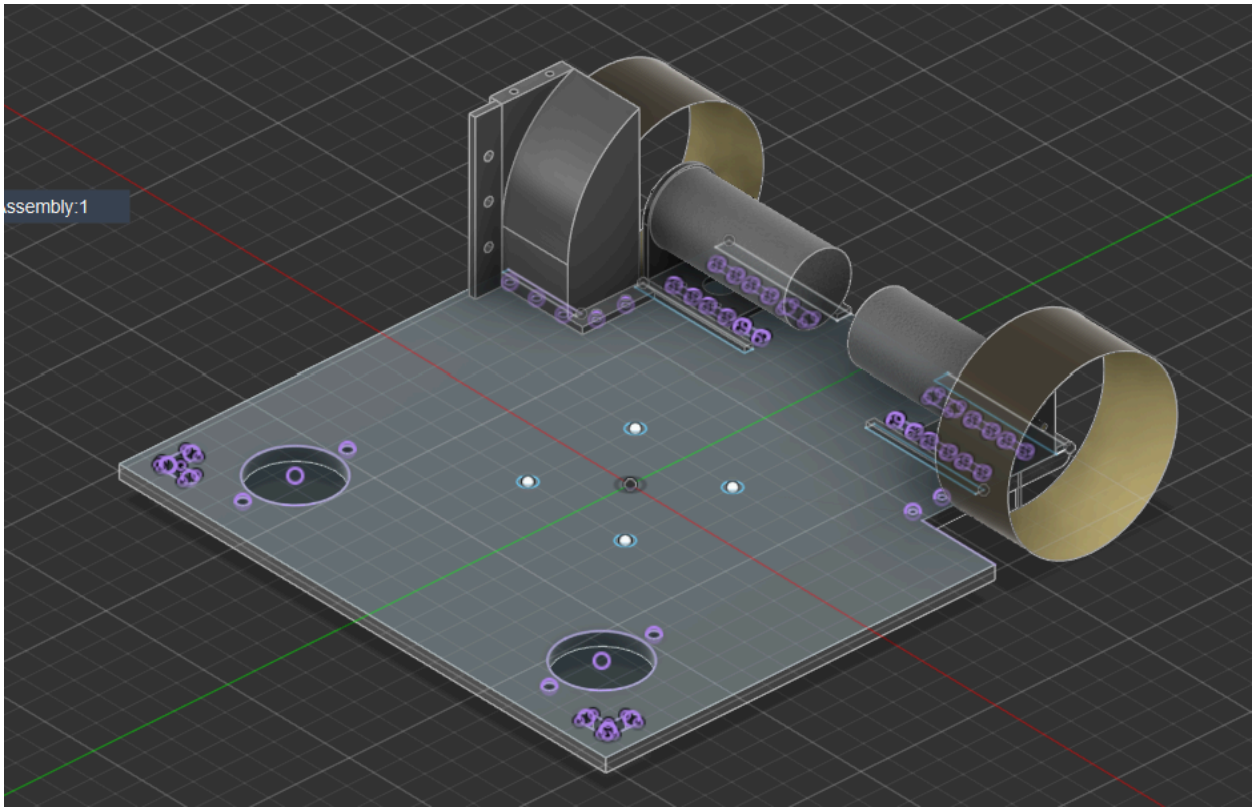

Fender 3d model:

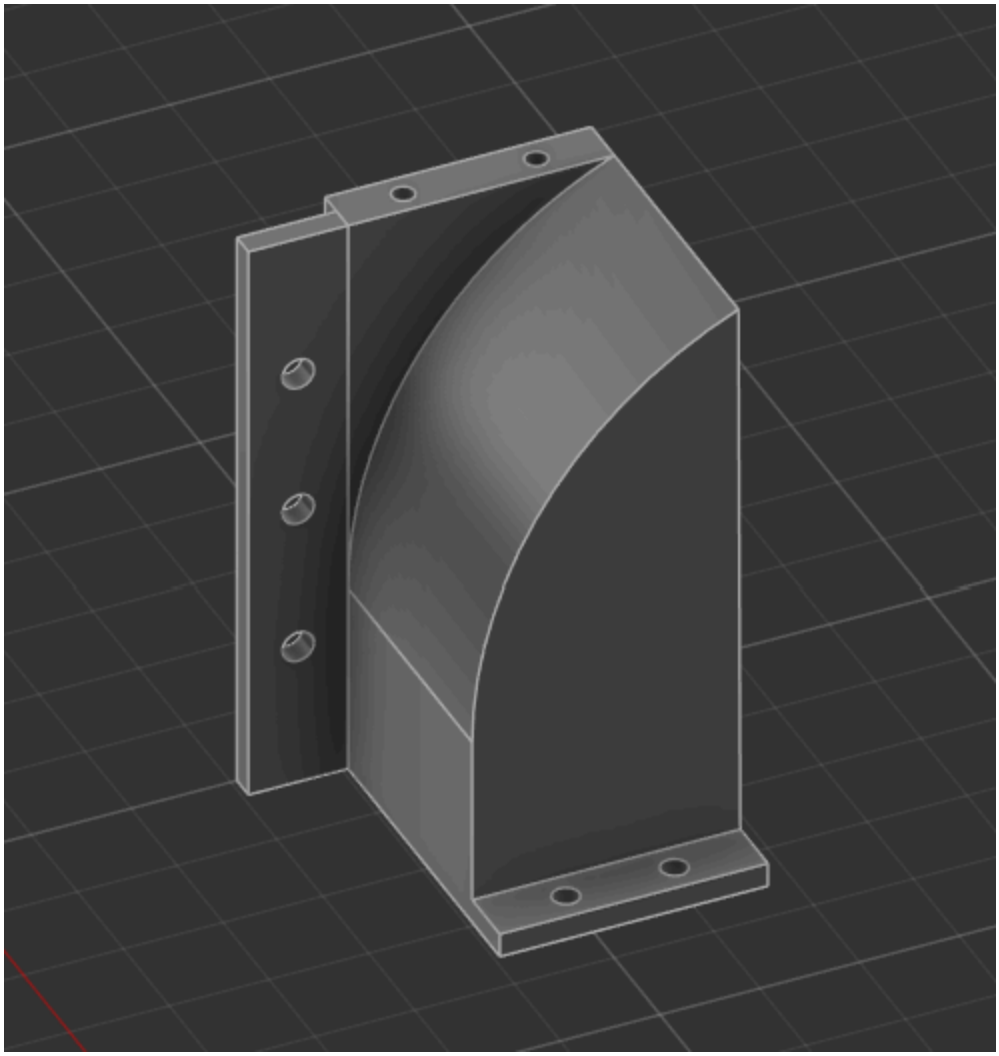

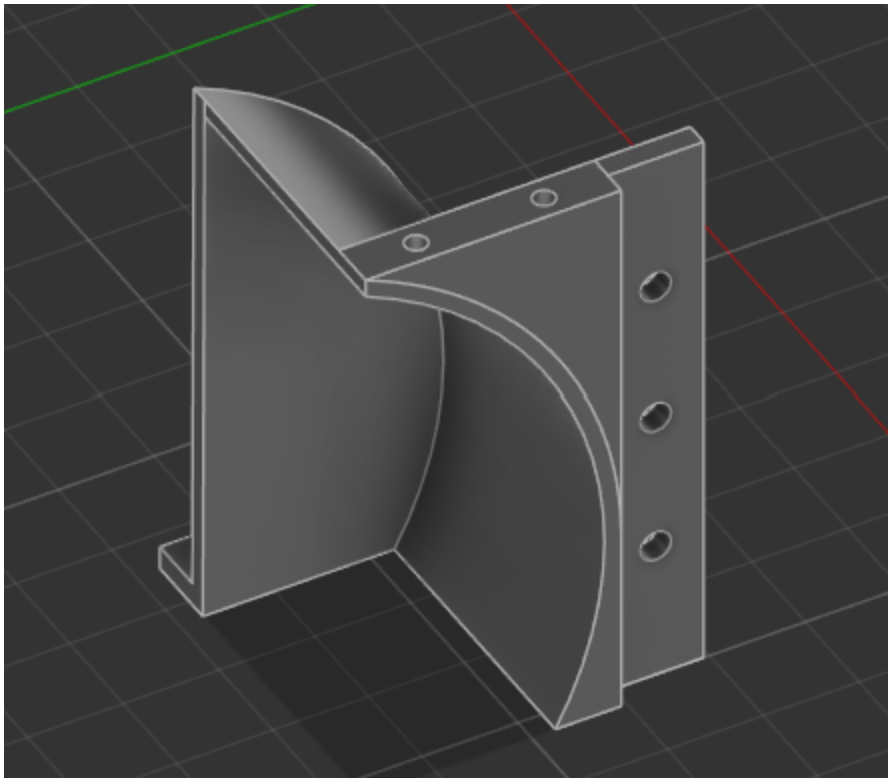

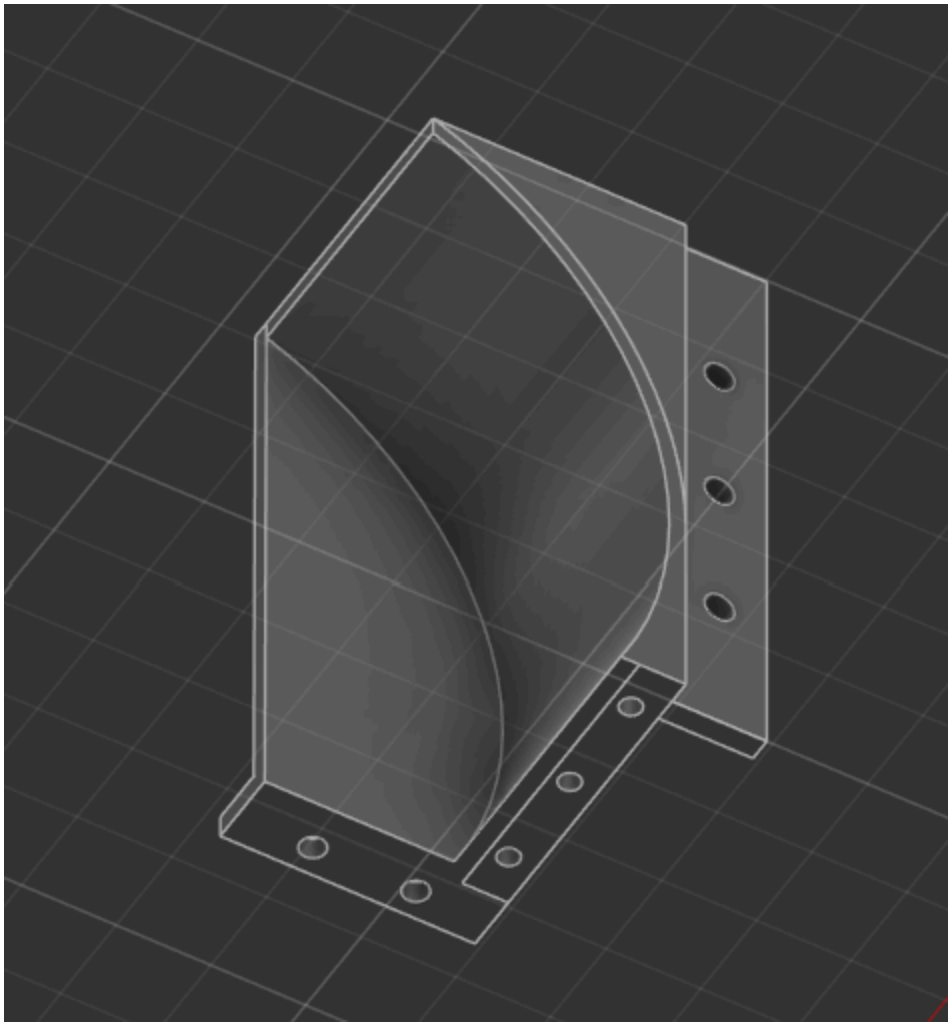

Added 3 mounting holes for m2.5 and m3 scews and added BTS 7960 Driver motors

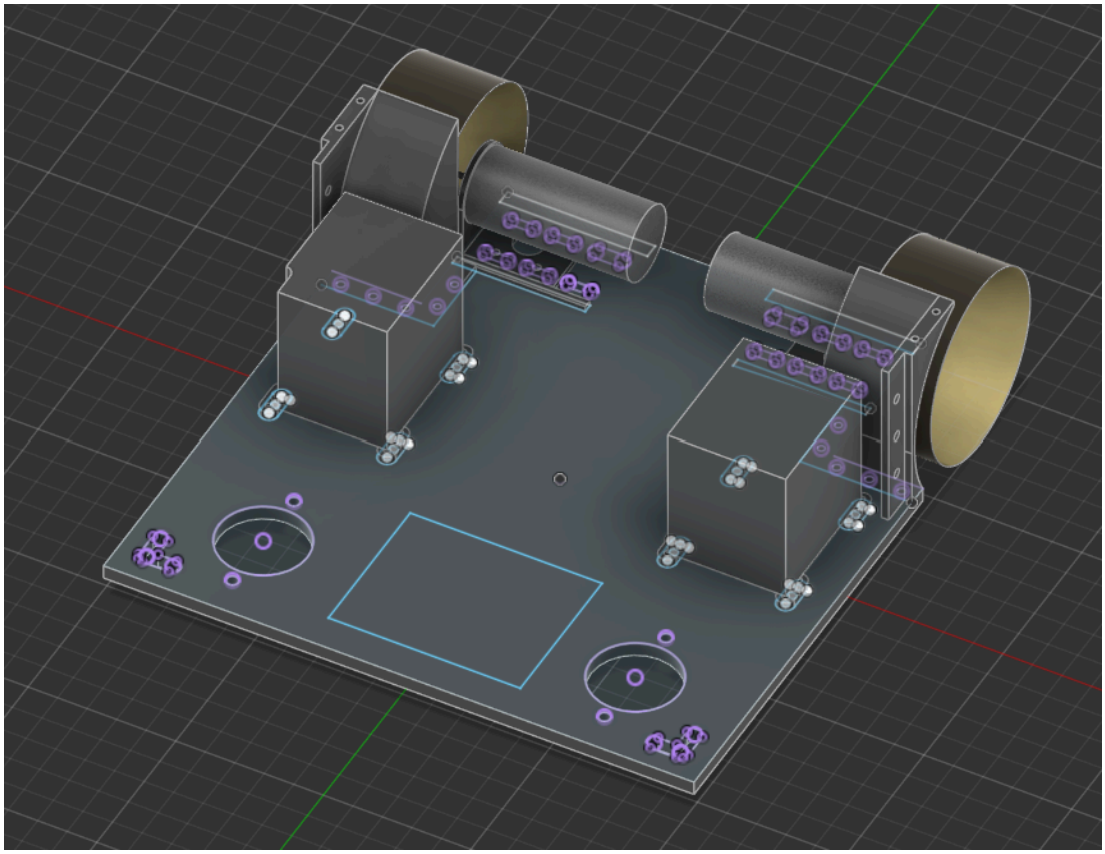

Structural improvements: added 3mm beams in a grid configuration

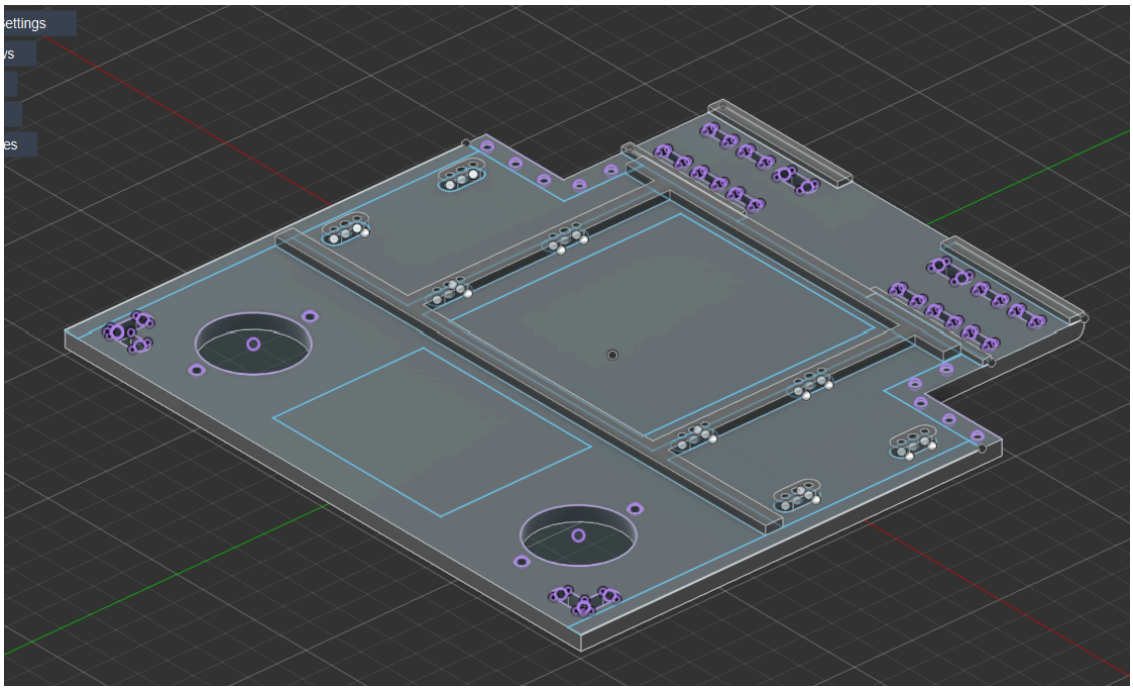

April 3 progress on 3d design:
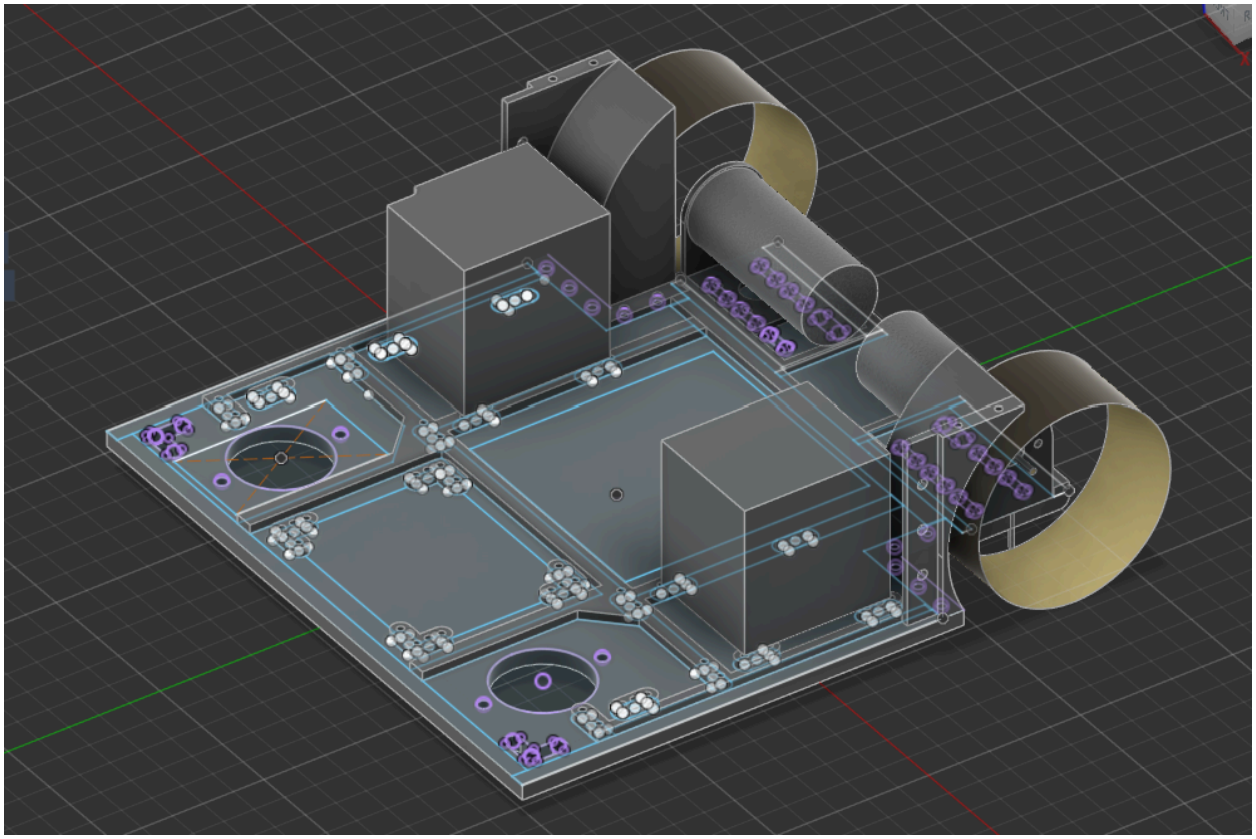
- update: added mounting holes for the microprocessor located on the center front.
- Batteries (4s of 3.7v 18650 batteries) will be on the center back to transfer more weight on the wheels for better traction and grip.